FIRST ANGLE PROJECTION

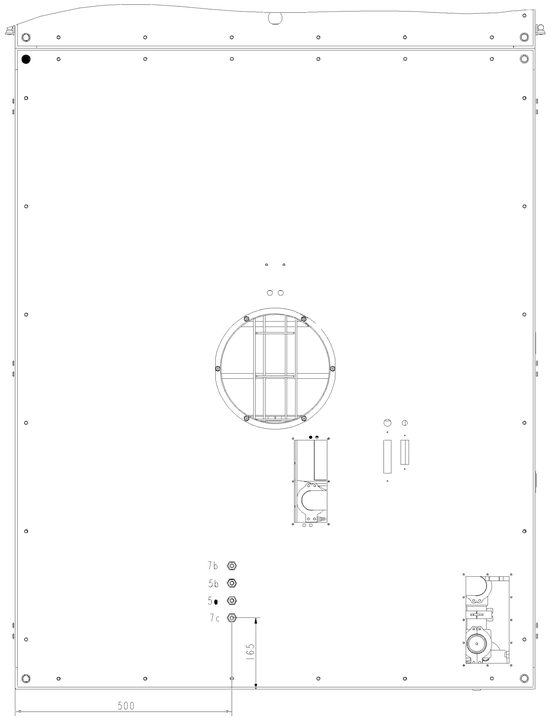

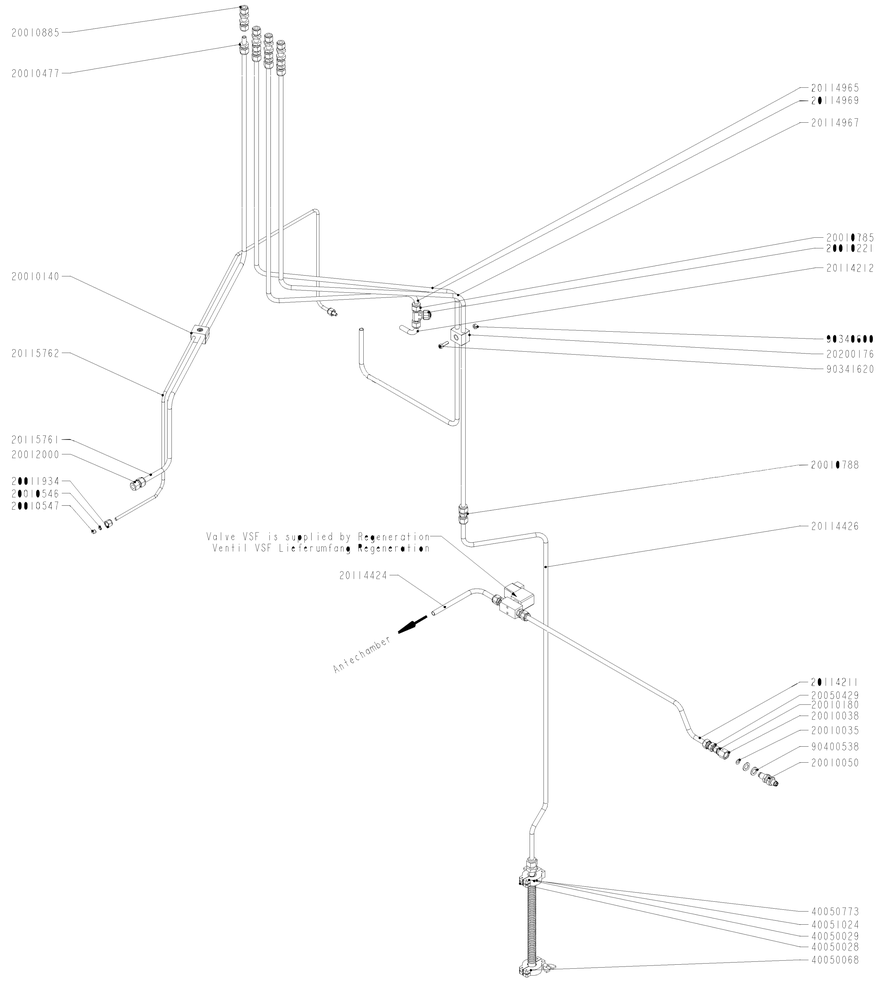

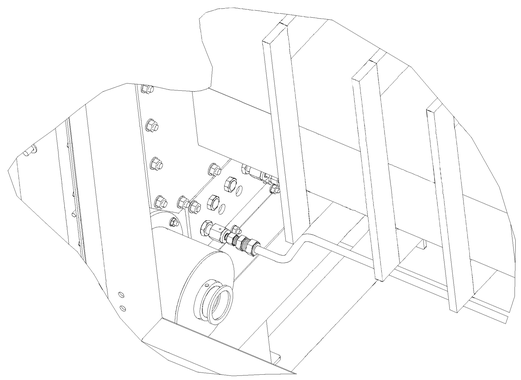

7:20

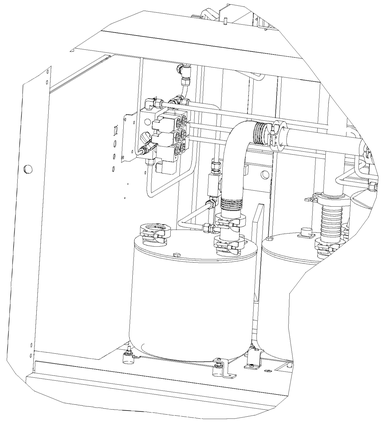

Drawingnumber Zeichnungs-nummer	Quantity Menge	Description Benennung
20010035	1	Gasket=1/4"VCR Dichtscheibe=1/4"VER
20010050	1	Nut=1/4"VCR=F Mutter=1/4"VCR=F
20010050	1	Ruhrkopf-Union=1/4VCR=M Schnellverschraubung=1/4VCR=M
20010140	1	Tube-Clamp=Double=D=6 Rohrschelle=Doppelt=D=6
20010221	1	Plug=SL=10 Verschlußstopfen=SL=10
20010477	4	Reducing-Adapter=SL=10=3/8" Reduzierstutzen=SL=10-M=3/8"=SS
20010546	2	Ferrule=Back=1/4"=SL Klemmring=Hinterer=1/4"=SL
20010547	2	Ferrule=Front=1/4"=SL Klemmring=Vorderer=1/4"=SL
20010785	1	T-Union=SL=10 T-Verschraubung=SL=10
20010788	1	Union=SL=10 Rohrverschraubung=SL=10
20010885	4	Bulkhead-Union=SL=3/8 Schottverschraubung=SL=3/8"
20011934	2	Nut=1/4"=SL Mutter=1/4"=SL
20012000	1	Female-Connector=SL=10mm=R1/8"-F Aufschraubverschraubung=SL=10mm=1/8"=ISO
20050429	1	Union=SL=10=R1/4=FF Verschraubung=SL=10=1/4"=SS
20114211	1	Piping=IC2=GB-Supply=10mm=Antechamber=Refill Verrohrung=IC2=GB-Versorgung=10mm=Antechamber=Refill
20114212	1	Piping=IC2=GB-Supply=10mm=Forming gas Verrohrung=IC2=GB-Versorgung=10mm=Formiergas
20114424	1	Piping=IC2=GB-Supply=10mm=Workinggas Verrohrung=IC2=GB-Versorgung=10mm=Arbeitsgas
20114426	1	Piping=IC2=GB-Supply=10mm=Antechamber=Refill=Teil2 Verrohrung=IC2=GB-Versorgung=10mm=Antechamber=Refill=Teil2
20114965	1	Piping=IC2=GB-Supply=GB-Pump=Exit=Part2 Verrohrung=IC2=GB-Versorgung=GB-Pumpe=Ausgang=Teil2
20114967	1	Piping=IC2=GB-Supply=10mm=Forming gas Verrohrung=IC2=GB-Versorgung=10mm=Formiergas
20114969	1	Piping=IC2=GB-Supply=GB-Pump=Exit Verrohrung=IC2=GB-Versorgung=GB-Pumpe=Ausgang
20115761	1	Piping=IC2=GB-Supply=10mm=Working Gas=Part2 Verrohrung=IC2=GB-Versorgung=10mm=Arbeitsgas=Teil2
20115762	1	Piping=IC2=GB-Supply=10mm=Forming Gas=Exit Verrohrung=IC2=GB-Versorgung=10mm=Formiergas=Ausgang
20200176	1	Piping=IC2=GB-Supply=1/4"=Forming Gas=FM-in Verrohrung=IC2=GB-Versorgung=1/4"=Formiergas=FM-in
40050028	2	Tube-Clamp=Double=D=10mm Rohrschelle=Doppelt=D=10mm
40050029	2	Clamp=DN10/16KF Spannring=DN10/16KF
40050068	1	Centering ring=DN16KF Zentrierring=DN16KF
40050773	1	Bellow=DN16KF=L=250 Metallschlauch=DN16KF=L=250
40051024	2	Adapter=DN16KF=SL=10 Adapter=DN16KF=SL=10
90340600	2	Supporting Ring=Outer=DN16KF=Center Ring Stützring=Außen=DN16KF=Zentrierring
90341620	2	Nut=DIN934=M6 Mutter=DIN934=M6=SK
90400538	2	Screw=DIN912=M6x20=HSHE=ZN Schraube=DIN912=M6x20=ISK=ZN
20010885	1	Flat gasket=ID=10x12x12=Viton Flachdichtung=ID=10x12x12=Viton
		Shaft-Gland=1/4"VCR Schweissstutzen=Kurz=1/4"VCR

Release for Production ! Freigabe zur Produktion!	Datum	Name
	13.12.11	S.Jarco

TOLERANCES (unless otherwise stated): General tolerances according to DIN ISO 2768 -cL

Index	Modification	DCN	Date	Name
		-		
		-		
		-		
		-		

FINISH Surface area DIN ISO 1302 Ra 3.2

Remove all sharp edges & burrs

DO NOT SCALE

ISO 128

Scale: 1:5

Material: -

	Date	Name
AO		
Drawn by:	13.12.11	
Checked:	13.12.11	M.
Standard:	-	

Title: Gas supply=Glovebox=Regeneration=IC2
Gasversorung=Glovebox=Regeneration=IC2

AIXTRON

Drawing number: 41.06.0196-R003

Sheet 1 1 sh.

The entire contents of this document are the intellectual property of AIXTRON AG, AIXTRON Ltd and Epigress AB. In addition to the author's rights and copyright, AIXTRON AG, AIXTRON Ltd and Epigress AB reserves the right in particular to apply for industrial property rights (patents). Reproduction and/or transmission to third parties (including extracts) is not permitted without the prior written consent of AIXTRON AG, AIXTRON Ltd and Epigress AB. Any misuse of this document could result in civil and criminal proceedings.